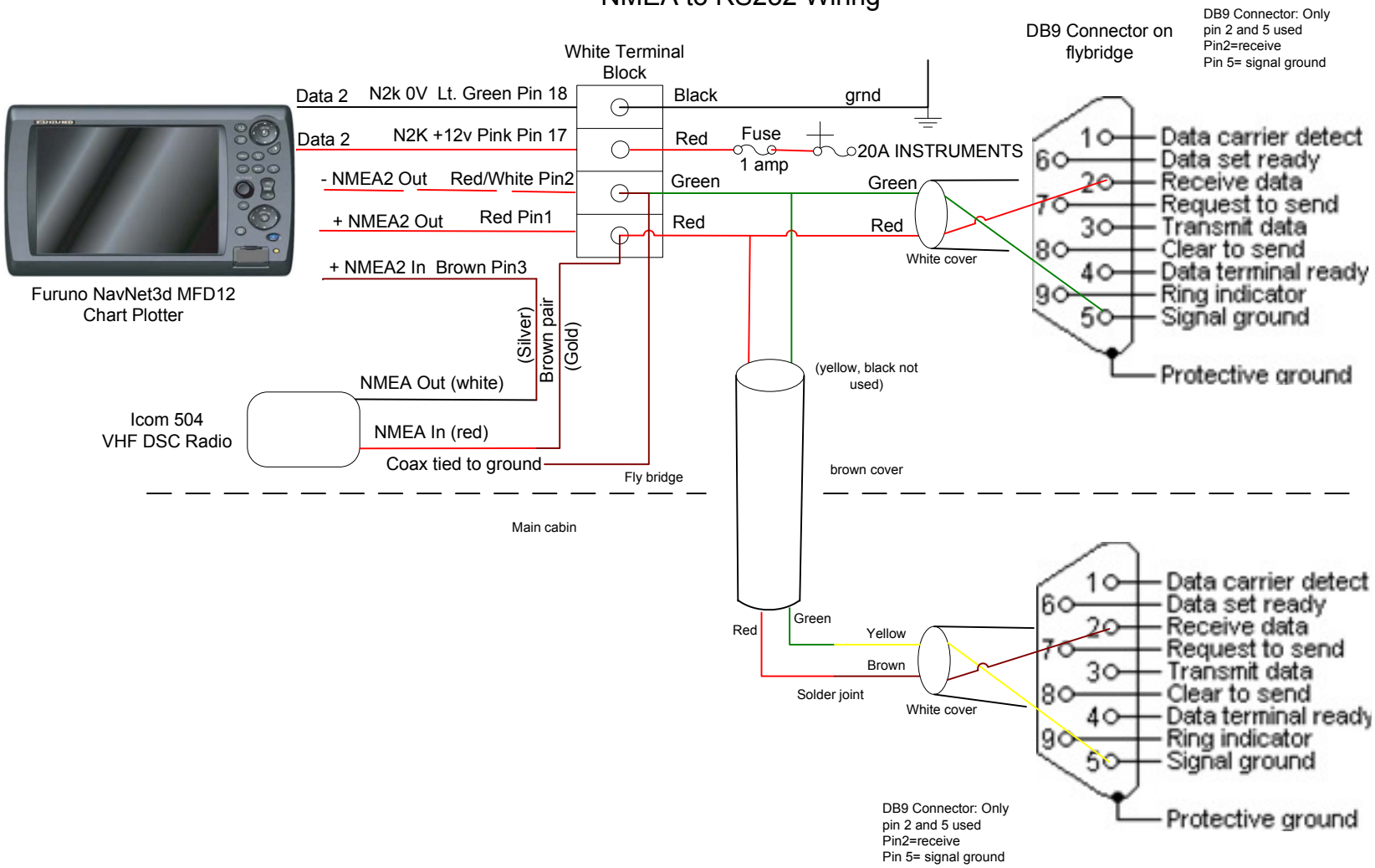SAY GOOD-BYE 1982 Defever 41
NMEA to RS232 Wiring